Suspended led lamp black vintage style 35cm - E27

Suspended lights

75.00 €Ex VAT

- 25.00 % ~~100.00~~

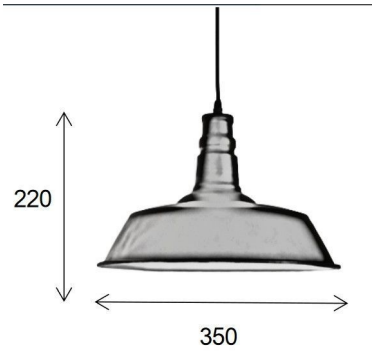

FEATURES

Brand	Spots
Base	
Fitting	
Color	Noir
Ref	lam-led-sup-3076
ID	3076
Delivery schedule	5-10 working days
Category	Suspended lights
Type	Store lighting

DETAIL

Don't hesitate to contact us for more information about our professional lighting ranges for your points of sale.

Our hanging led lamps are guaranteed 3 years, lifetime 50,000 hours.

Are you looking for a modular solution that allows you to adapt your lighting to the configuration and layout of your sales area, or do you simply not have a suspended ceiling?

DESCRIPTION

Description:

- Colour - Matt white interior
- Housing - Pewter plate
- Lamp holder E27
- LED type: E27 supplied without light source
- Length of suspension 3m (black fabric thread)

Features:

- 230V - E27 Net weight:780 gramsDiameter:35cm
- V - 230
- WATT - 75W
- Base - E27

Suspended led lamp black vintage style 35cm - E27

Suspended lights - Photo n° 1

FEATURES

Brand	Spots
Base	
Fitting	
Color	Noir
Ref	lam-led-sup-3076
ID	3076
Delivery schedule	5-10 working days
Category	Suspended lights
Type	Store lighting

DETAIL

Don't hesitate to contact us for more information about our professional lighting ranges for your points of sale.

Our hanging led lamps are guaranteed 3 years, lifetime 50,000 hours.

Are you looking for a modular solution that allows you to adapt your lighting to the configuration and layout of your sales area, or do you simply not have a suspended ceiling?

Suspended led lamp black vintage style 35cm - E27

Suspended lights - Photo n° 2

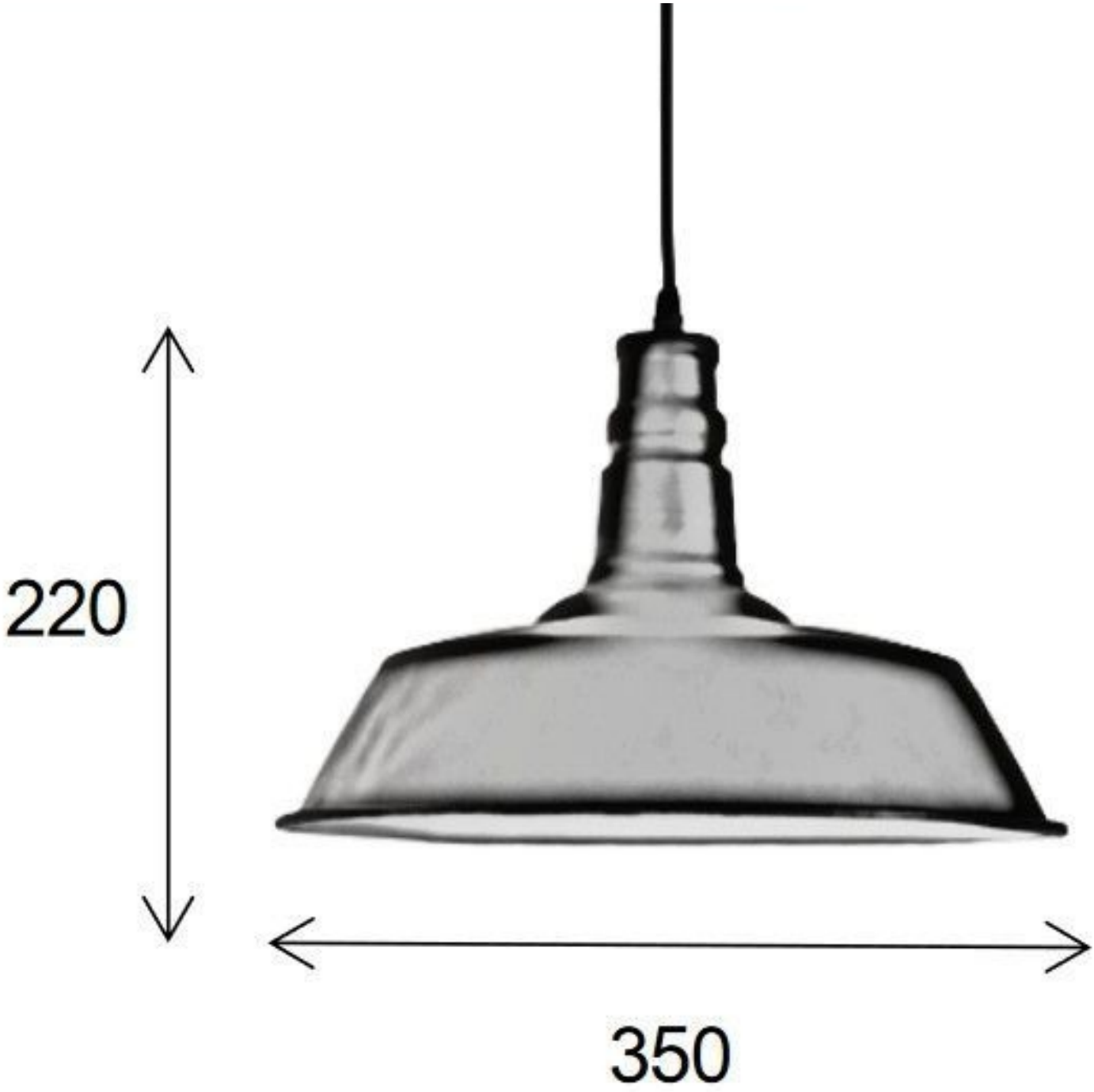

FEATURES

Brand	Spots
Base	
Fitting	
Color	Noir
Ref	lam-led-sup-3076
ID	3076
Delivery schedule	5-10 working days
Category	Suspended lights
Type	Store lighting

DETAIL

Don't hesitate to contact us for more information about our professional lighting ranges for your points of sale.

Our hanging led lamps are guaranteed 3 years, lifetime 50,000 hours.

Are you looking for a modular solution that allows you to adapt your lighting to the configuration and layout of your sales area, or do you simply not have a suspended ceiling?