Free standing hydroalcoholic gel dispenser red color

Covid protection material

149.25 €Ex VAT

- 25.00 % ~~199.00~~

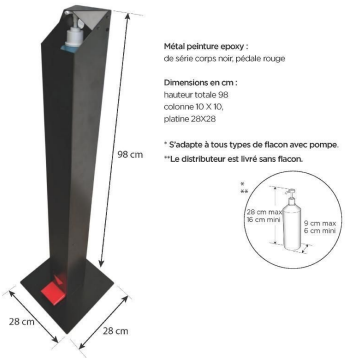

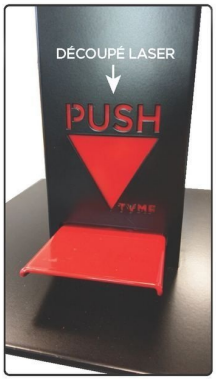

FEATURES

Brand	Securite shopping
Base	Square metal
Fitting	Foot
Ref	dis-gel-hyd-3085
ID	3085
Delivery schedule	1-5 working days
Category	Covid protection material
Type	Security system

DETAIL

Hydroalcoholic gel dispenser with foot control.

Epoxy painted metal finish. Original design.

Dimensions total height 980 mm, column 100 X 100 mm, plate 280 X 280 mm

Adapts to all types of bottle with pump within the limits specified below.

Hydroalcoholic gel dispenser for hand disinfection at any time.

Possibility of fixing it to the ground

This gel dispenser is completely mechanical. Its foot control eliminates any

Perfectly stable and very resistant, it adapts to all standard bottles.

DESCRIPTION

Self-supporting hydroalcoholic gel dispenser with foot control.
Epoxy painted metal Red finish. Original design.
Dimensions in mm: total height 980 mm, column 100 X 100 mm, plate 280 X 280 mm
Adapts to all types of bottle with pump within the limits specified below.

Hydroalcoholic gel dispenser for hand disinfection at any time.
Possibility of fixing it to the ground
This gel dispenser is completely mechanical. Its foot control eliminates any contact of the hands with the support.
Perfectly stable and very resistant, it adapts to all standard bottles.

Free standing hydroalcoholic gel dispenser red color

Covid protection material - Photo n° 1

FEATURES

Brand	Securite shopping
Base	Square metal
Fitting	Foot
Ref	dis-gel-hyd-3085
ID	3085
Delivery schedule	1-5 working days
Category	Covid protection material
Type	Security system

DETAIL

Hydroalcoholic gel dispenser with foot control.

Epoxy painted metal finish. Original design.

Dimensions total height 980 mm, column 100 X 100 mm, plate 280 X 280 mm

Adapts to all types of bottle with pump within the limits specified below.

Hydroalcoholic gel dispenser for hand disinfection at any time.

Possibility of fixing it to the ground

This gel dispenser is completely mechanical. Its foot control eliminates any contact of the hands with the support.

Free standing hydroalcoholic gel dispenser red color

Covid protection material - Photo n° 2

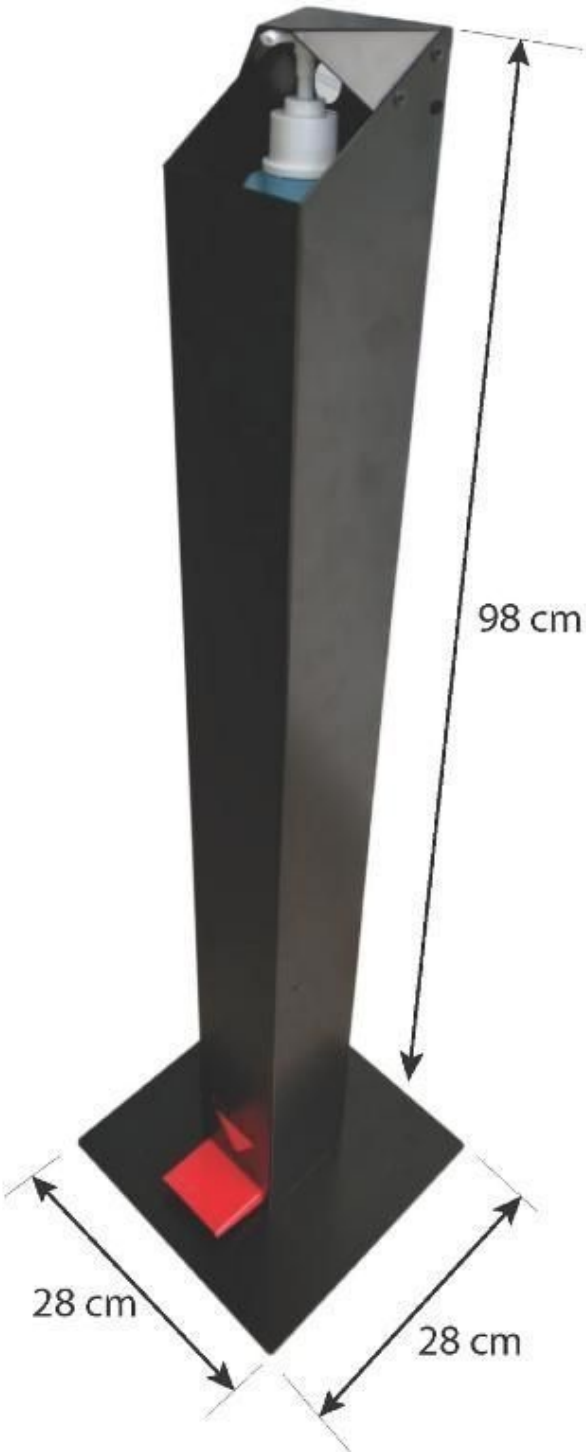

Métal peinture epoxy :
de série corps noir, pédale rouge

Dimensions en cm :
hauteur totale 98
colonne 10 X 10,
platine 28X28

*** S'adapte à tous types de flacon avec pompe.**
****Le distributeur est livré sans flacon.**

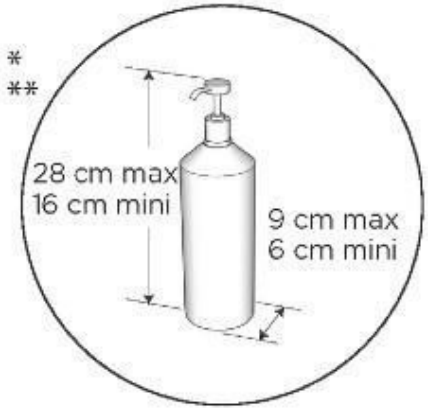

FEATURES

Brand	Securite shopping
Base	Square metal
Fitting	Foot
Ref	dis-gel-hyd-3085
ID	3085
Delivery schedule	1-5 working days
Category	Covid protection material
Type	Security system

DETAIL

Hydroalcoholic gel dispenser with foot control.

Epoxy painted metal finish. Original design.

Dimensions total height 980 mm, column 100 X 100 mm, plate 280 X 280 mm

Adapts to all types of bottle with pump within the limits specified below.

Hydroalcoholic gel dispenser for hand disinfection at any time.

Possibility of fixing it to the ground

This gel dispenser is completely mechanical. Its foot control eliminates any contact of the hands with the support.

Perfectly stable and very resistant, it adapts to all standard bottles.

Free standing hydroalcoholic gel dispenser red color

Covid protection material - Photo n° 3

Perfectly stable and very resistant, it adapts to all standard bottles.

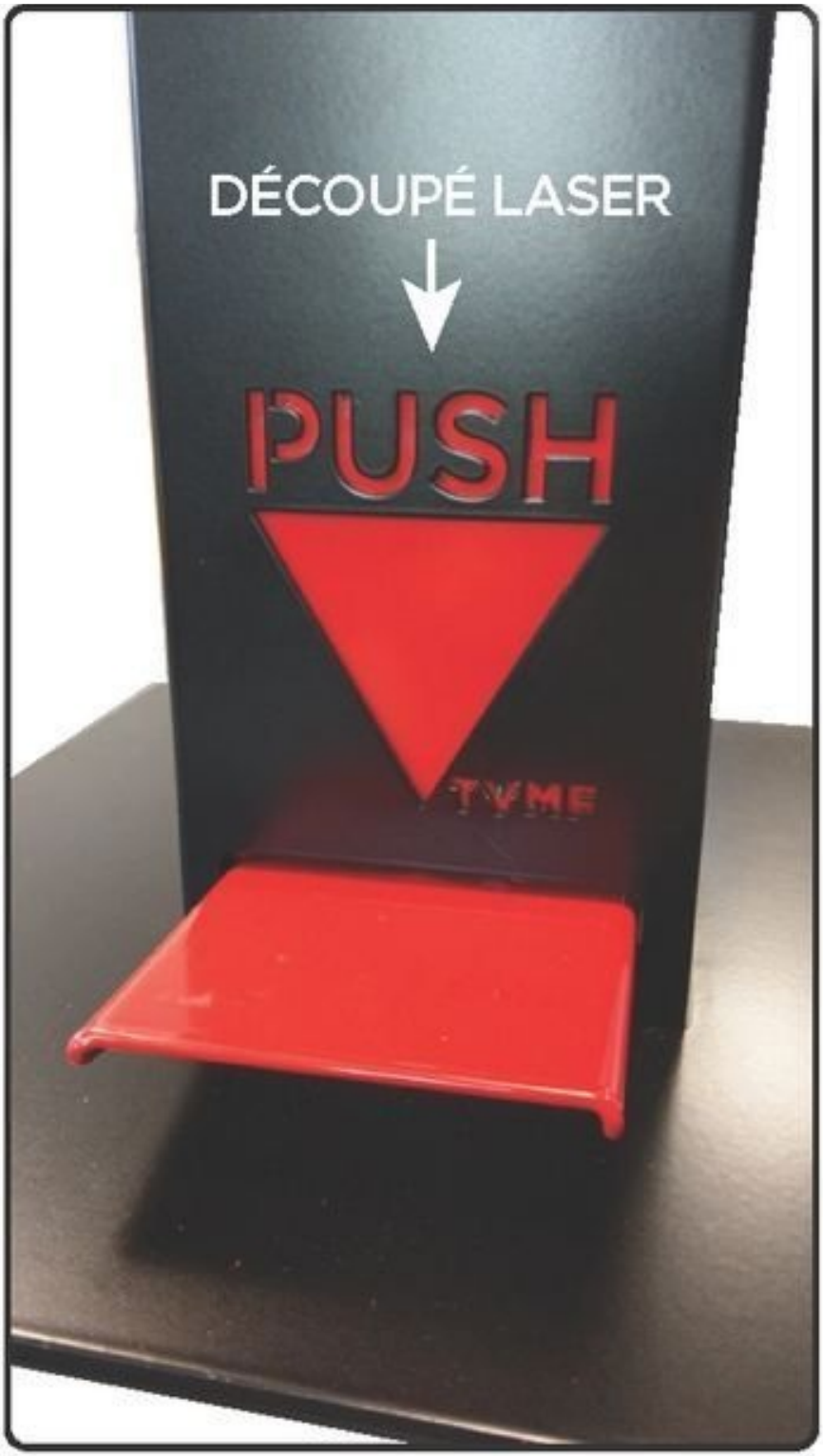

FEATURES

Brand	Securite shopping
Base	Square metal
Fitting	Foot
Ref	dis-gel-hyd-3085
ID	3085
Delivery schedule	1-5 working days
Category	Covid protection material
Type	Security system

DETAIL

Hydroalcoholic gel dispenser with foot control.

Epoxy painted metal finish. Original design.

Dimensions total height 980 mm, column 100 X 100 mm, plate 280 X 280 mm

Adapts to all types of bottle with pump within the limits specified below.

Hydroalcoholic gel dispenser for hand disinfection at any time.

Possibility of fixing it to the ground

This gel dispenser is completely mechanical. Its foot control eliminates any contact of the hands with the support.

Perfectly stable and very resistant, it adapts to all standard bottles.

Free standing hydroalcoholic gel dispenser red color

Covid protection material - Photo n° 4

FEATURES

Brand	Securite shopping
Base	Square metal
Fitting	Foot
Ref	dis-gel-hyd-3085
ID	3085
Delivery schedule	1-5 working days
Category	Covid protection material
Type	Security system

DETAIL

Hydroalcoholic gel dispenser with foot control.

Epoxy painted metal finish. Original design.

Dimensions total height 980 mm, column 100 X 100 mm, plate 280 X 280 mm

Adapts to all types of bottle with pump within the limits specified below.

Hydroalcoholic gel dispenser for hand disinfection at any time.

Possibility of fixing it to the ground

This gel dispenser is completely mechanical. Its foot control eliminates any contact of the hands with the support.

Perfectly stable and very resistant, it adapts to all standard bottles.

Free standing hydroalcoholic gel dispenser red color

Covid protection material - Photo n° 5

FEATURES

Brand	Securite shopping
Base	Square metal
Fitting	Foot
Ref	dis-gel-hyd-3085
ID	3085
Delivery schedule	1-5 working days
Category	Covid protection material
Type	Security system

DETAIL

Hydroalcoholic gel dispenser with foot control.

Epoxy painted metal finish. Original design.

Dimensions total height 980 mm, column 100 X 100 mm, plate 280 X 280 mm

Adapts to all types of bottle with pump within the limits specified below.

Hydroalcoholic gel dispenser for hand disinfection at any time.

Possibility of fixing it to the ground

This gel dispenser is completely mechanical. Its foot control eliminates any contact of the hands with the support.

Perfectly stable and very resistant, it adapts to all standard bottles.

Free standing hydroalcoholic gel dispenser red color

Covid protection material - Photo n° 6

FEATURES

Brand	Securite shopping
Base	Square metal
Fitting	Foot
Ref	dis-gel-hyd-3085
ID	3085
Delivery schedule	1-5 working days
Category	Covid protection material
Type	Security system

DETAIL

Hydroalcoholic gel dispenser with foot control.

Epoxy painted metal finish. Original design.

Dimensions total height 980 mm, column 100 X 100 mm, plate 280 X 280 mm

Adapts to all types of bottle with pump within the limits specified below.

Hydroalcoholic gel dispenser for hand disinfection at any time.

Possibility of fixing it to the ground

This gel dispenser is completely mechanical. Its foot control eliminates any contact of the hands with the support.

Perfectly stable and very resistant, it adapts to all standard bottles.

Free standing hydroalcoholic gel dispenser red color

Covid protection material - Photo n° 7

FEATURES

Brand	Securite shopping
Base	Square metal
Fitting	Foot
Ref	dis-gel-hyd-3085
ID	3085
Delivery schedule	1-5 working days
Category	Covid protection material
Type	Security system

DETAIL

Hydroalcoholic gel dispenser with foot control.

Epoxy painted metal finish. Original design.

Dimensions total height 980 mm, column 100 X 100 mm, plate 280 X 280 mm

Adapts to all types of bottle with pump within the limits specified below.

Hydroalcoholic gel dispenser for hand disinfection at any time.

Possibility of fixing it to the ground

This gel dispenser is completely mechanical. Its foot control eliminates any contact of the hands with the support.

Perfectly stable and very resistant, it adapts to all standard bottles.